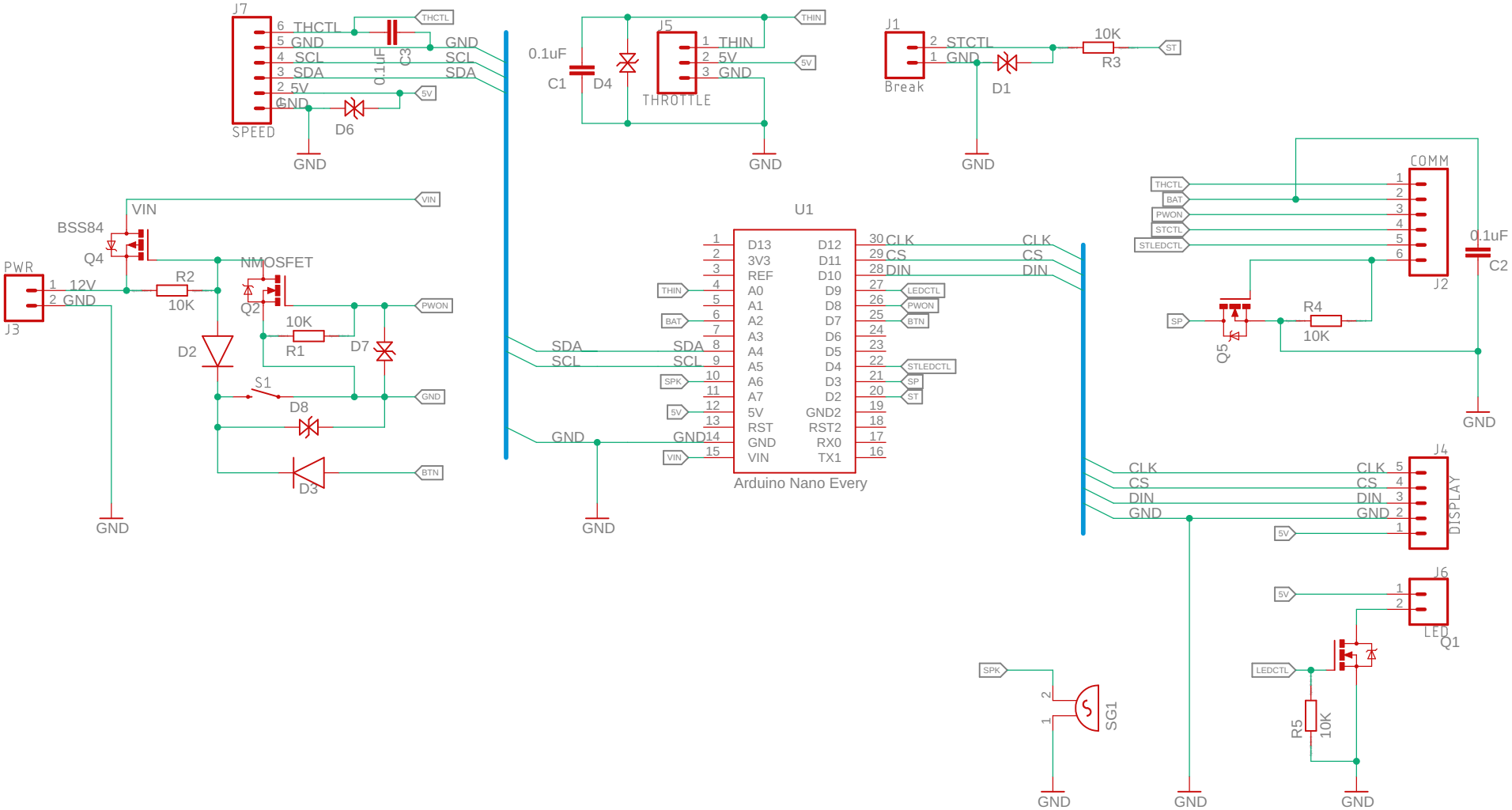
J7
SPEED
THCTL
GND
SCL
SDA
5V
GND
C3
0.1uF
D6
THCTL
GND
SCL
SDA
5V
GND
0.1uF
C1
D4
J5
THROTTLE
THIN
5V
GND
THIN
5V
GND
J1
Break
STCTL
GND
D1
10K
R3
ST
GND
VIN
BSS84
Q4
PWR
J3
12V
GND
R2
10K
NMOSFET
Q2
10K
R1
D7
PWON
D2
S1
D8
GND
D3
BTN
GND
VIN
U1
D13
3V3
REF
A0
A1
A2
A3
A4
A5
A6
A7
5V
RST
GND
VIN
D12
D11
D10
D9
D8
D7
D6
D5
D4
D3
D2
GND2
RST2
RX0
TX1
CLK
CS
DIN
LEDCTL
PWON
BTN
STLEDCTL
SP
ST
THIN
BAT
SPK
5V
VIN
SDA
SCL
GND
Arduino Nano Every
GND
CLK
CS
DIN
COMM
J2
THCTL
BAT
PWON
STCTL
STLEDCTL
0.1uF
C2
SP
Q5
R4
10K
GND
CLK
CS
DIN
GND
J4
DISPLAY
5V
J6
LED
Q1
5V
LEDCTL
R5
10K
SPK
SG1
GND
GND
GND